ISO 9001: 2000
Reg. No: RQ91/3979

AN ISO 9001
COMPANY

stroke pumps®

# Diaphragm Pump

## DPB - 75 ALB Aluminium Buna N

# Operation & Maintenance Guide

Common Nomenclature for DP / DPB Series pumps.

| WETTED PARTS | | PUMP SIZES |
|---|---|---|
| Aluminium | = Al | 75 - 3” pump |
| Stainless Steel | = SS | 50 - 2” pump |
| Polypropylene | = PP | 40 - 1½” pump |
| Cast iron | = CI | 25 - 1” pump |
| | | 12 - ½” pump |
| DIAPHRAGMS | | |
| Neoprene | = N | |
| Buna N | = B | |
| PTFE | = T | |
| Viton | = V | |

MODEL EXAMPLE

DP B 12 SS T

- T — Diaphragms
- SS — Wetted parts
- 12 — Size of pumps
- B — Type of construction
  B - Bolted
  W/O B - Clamped
- DP — Diaphragm Pumps

## Air Supply

Compressed air at 90 psi, free from moisture and having an oil mist is essential. Use of filter regulator lubricator (FRL) unit is highly recommended and should be installed as close as possible to the pump inlet. Ensure that the correct grade of oil is used to obtain proper shifting of the air valve. Too thick an oil may cause the shifting mechanism to run slower than normal and affect pump performance. See DPB-75 ALB lubricants at bottom of this section.

## Site Selection

Ideally the pump should be located in such a way that the piping should have the minimum bends. This will keep friction losses to a minimum and extend the pump parts life. The location should be easily accessible to make maintenance easier. Try to install the pump in such a way to minimize the suction head for maximum pumping efficiency. See pump performance at end of section for suction and delivering head data. Ensure that the suction head is well within the pumps capability. In areas where there is a possibility of a positive suction head, a suitable gate valve is a must to allow for pump maintenance. Diaphragm pumps generate vibratory force due to the reciprocatory motion, ensure that suitable flexible piping is employed between the pump and pipelines. Also the pump should be bolted down onto a solid foundation. Ensure that the correct pipe diameters are used, especially if the fluid is of a viscous nature. See table at end of section for proper selection of pipe diameter.

Should the application demand, these pumps can be used in the submerged condition. In this situation exhaust air must be piped above the surface of the fluid. Diaphragm pumps are capable of handling considerable solid sizes. DPB-75 ALB Series pumps will let solids of 9.5mm diameter pass through. It is preferable that a suitable strainer be installed on the suction line to prevent the possibility of ingress of larger particles. All joints should be leak proof - leaky joints on suction side will drastically affect the pumps suction head capabilities.

## Safety

Always wear safety glasses in vicinity of an operating pump, fluid being pumped may spray in case of diaphragm rupture. Necessary care should be taken if the fluid being pumped is hazardous. Do not exceed 125psi air supply pressure. Ensure that all clamp bands are tightened correctly to specified torques. Verify compatibility of fluid being pumped with pump wetted parts. Before opening supply hose connections ensure that the supply has been shut off.

## Suction capabilities

DPB-75 ALB Series pumps, under ideal conditions generate a vacuum equivalent to 16 feet of water. Practical the amount of suction head the pump will generate is dependant on many factors among them being atmospheric pressure, viscosity of process fluid, density of the process fluid and number of bends in suction side of piping.

Pipe Diameters recommended

DPB-75ALB Series pump discharge and suction pipelines sizes are 3 inch inside diameters. Suction side should be non collapsible.

## Tightening torques recommended

Outer flange to Shaft 45 Nm
Outlet & inlet 3.5 Nm
Liquid chamber & Air disc 11 Nm
Air Valve Body to Housing 3.5 Nm

## BUNA -N ELASTOMER DPB-75 ALB

Temperature range : -12.2°C to 82.2°C
Excellent for application involving petroleum/oil based fluids such as leaded gasolene, fuel oil,
Non-synthetic hydraulic oils, kerosene, turpentine and motor oils.

**Troubleshooting**

| Problem | Possible cause and solution |
|---|---|
| Pump will not run | Air valve stuck, service or replace if worn.<br>Air supply insufficient, Check proper and adequate air supply<br>Check shaft operation, replace worn shaft or rings |
| Pump runs slowly | Check ball seats and proper clamping<br>Check air valve operation<br>Check shaft operation |
| Air valve freezing | Remove moisture from air supply line |
| Air bubbles in discharge and / or fluid discharging from air exhaust | Replace diaphragms |

## Dis-assembly and Re-assembly

Shut off air supply and allow residual pressure to bleed off.

Disconnect air supply. Disconnect inlet and outlet discharge lines

Turn upside down and allow process fluid to drain away. Make a mark to indicate the positioning of each liquid chamber relative to the housing.

Remove the hex head bolts on one side and lift off the outlet. Then remove bolts on bottom side and inlet manifolds. Remove balls and seats from the pump body. Remove the bolts on one side and lift away the liquid chamber.

Unscrew the outer flange and remove the diaphragm. Do not damage the diaphragm during this operation. Unscrew the stud from the shaft

Repeat procedure for the other side diaphragm. Take care not to dent or damage the shaft housing. Remove the O rings from the housing carefully. Unscrew the four screws holding the air valve assembly to the housing and lift off the assembly. The air valve is restrained by two circlips. Remove these circlips on either side of the air valve. Caps can be removed by screwing in a suitable puller into the tapping and pulling them out. Slide out the air valve.

Clean all components with light oil and inspect for wear. Specially ensure that there is no grit in the air valve cylinder as this will interfere with valve motion and impede performance.

Inspect all rubber components for wear as required.

Inspect the diaphragms for wear marks and replace if wear is excessive.

Inspect the shaft and housing O rings for wear and nicks and replace if necessary.

The air valve should be checked for smooth sliding within the air valve body. If air valve is excessively worn and there is considerable play in its motion, it should be replaced.

Re-assemble the parts in reverse sequence of dis-assembly.

Coat the air valve and shaft with recommended oil and assemble the air valve.

Check free motion of air valve in air valve body

Tighten bolts within specified limits.

**Suggested Lubricants**

| | *Above 27 deg C (80 deg F)* | *5 deg C to 27 deg C (40 degF to 80 degF)* | *Below 5 deg C ( 40 deg F)* |
|---|---|---|---|
| Shell | Toona R 72 | Toona R 41 | Toona R 27 |
| Mobil | Almo 529 | Almo 527 | Almo 525 |
| Esso | -- -- -- | Arox EP 65 | Arox EP 45 |
| Caltex | Rando Oil 150 | Rando Oil 100 | Rando Oil 46 |
| Texaco | Regal Oil F | Regal Oil PE | Regal Oil B |
| Daltron | Silkolene 881 | Silkolene 548 | Silkolene 773 |
| Burmah Castrol | RD Oil 3 | RD Oil Light | Megna SPX |
| BP | RD 220 HP60C | RD150 HP20C | RD80 HP10C |
| Duckham | Garnet 7 | Garnet 6 | Zero Flo 5 |
| Sternol | Merlin 87 | Merlin 71 | Merlin 54 |
| Petrofina | Purifoc 53 | Purifoc 46 | Purifoc 32 |
| Chevron | Vistac Oil 18X | Vistac Oil 19X | Vistac Oil 9X |

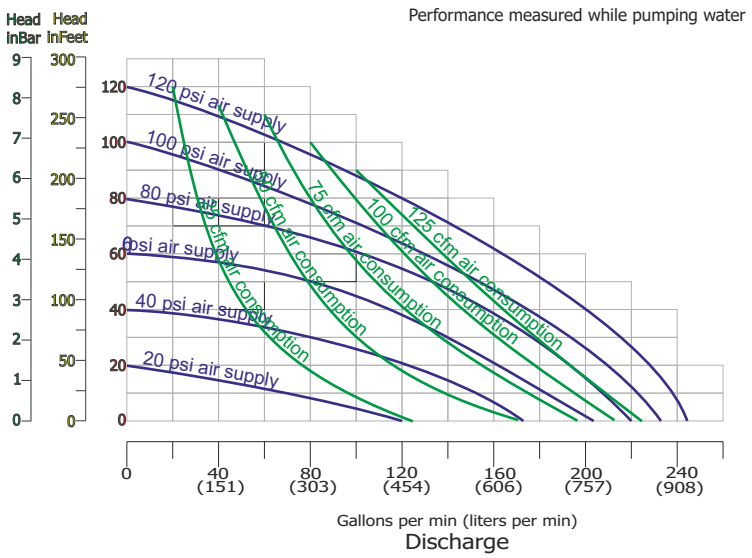


**Pump Peformance Graphs**

Illustrated graphs data are measured using clear water under ideal conditions. Actual pumping values may differ depending on application.

Solid graph indicates pumping performance at 90 PSI air supply pressure. Dashed graph indicates performance at 60 PSI.

# Physical Dimensions for DPB 75 Series

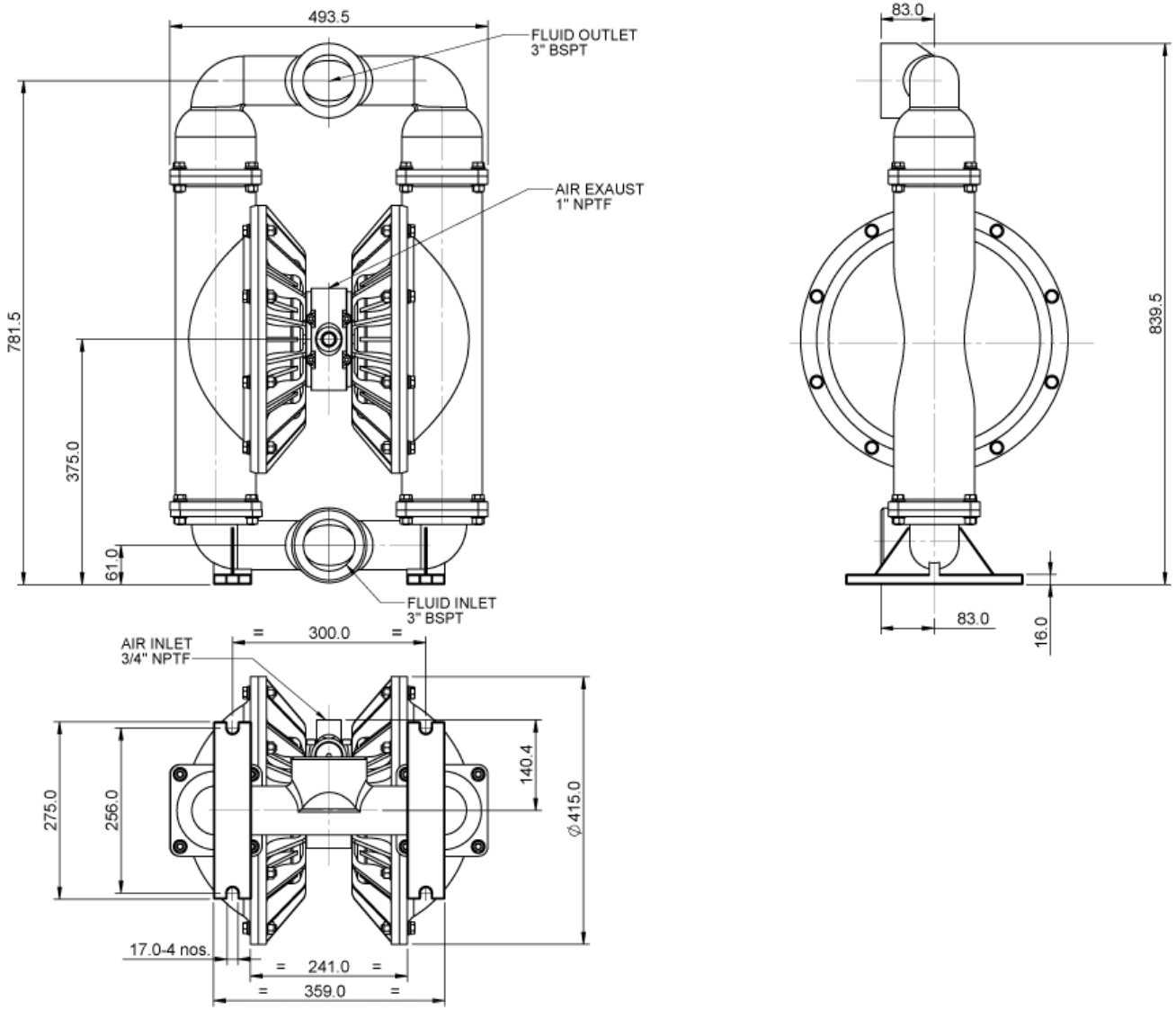

# Exploded View

## Diaphragm Pump DPB-75 ALB

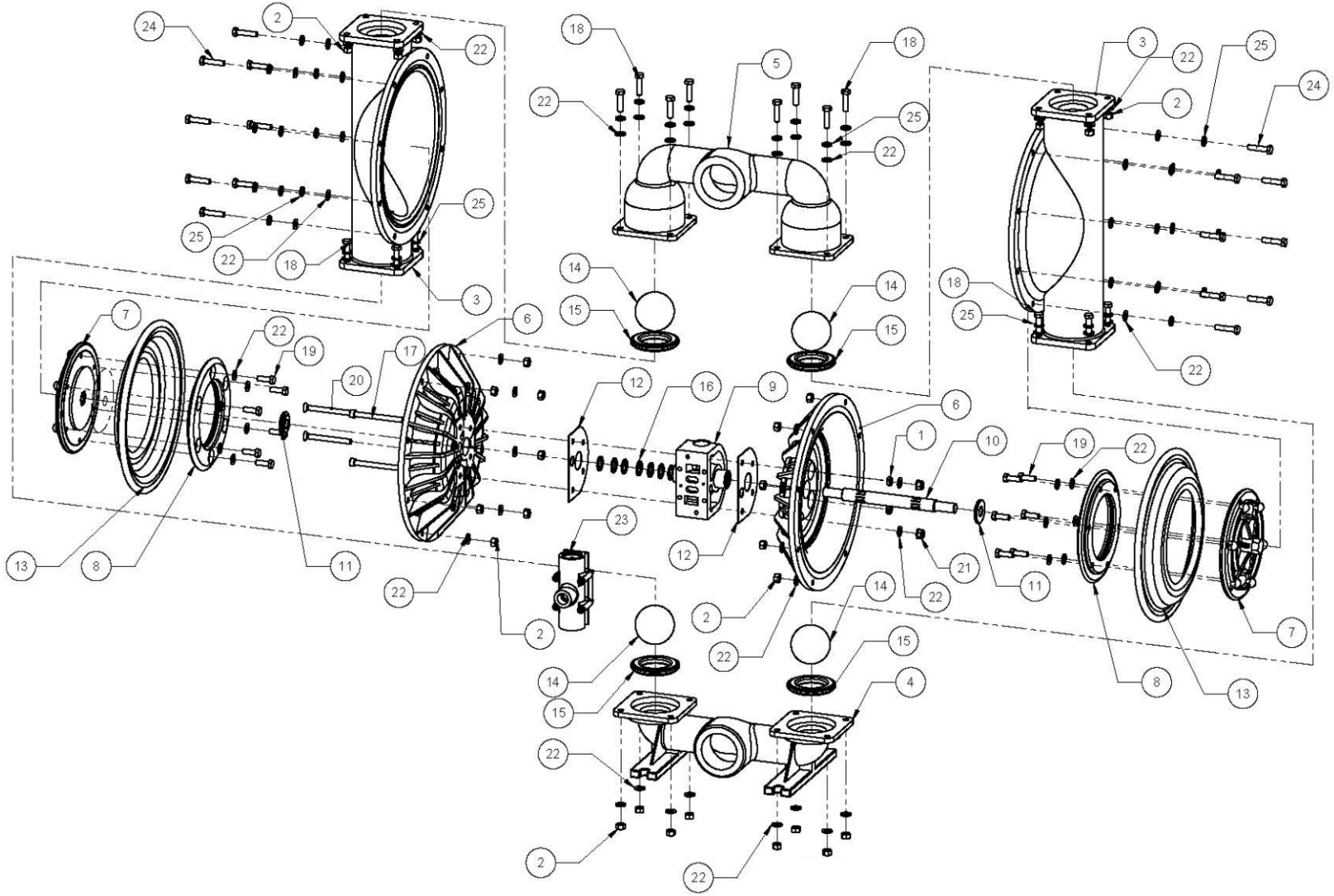

stroke pumps

teryair
www.teryair.com

# Assembly Part List of DPB-75 ALB

| ITEM NO. | PART NUMBER | DESCRIPTION | QTY. |
|---|---|---|---|
| 1 | 200_40_20 | LOCK NUT | 2 |
| 2 | 200_40_30 | NUT | 32 |
| 3 | 210_10_02 | OUTER SIDE CHAMBER | 2 |
| 4 | 210_10_03 | INLET BASE | 1 |
| 5 | 210_10_04 | OUTLET | 1 |
| 6 | 210_10_05 | AIR DISC | 2 |
| 7 | 210_10_07 | OUTER FLANGE | 2 |
| 8 | 210_10_08 | INNER FLANGE | 2 |
| 9 | 210_10_32 | CENTER PIECE WITH BUSH | 1 |
| 10 | 210_21_10 | SHAFT | 1 |
| 11 | 210_21_33 | SPACER FOR INNER FLANGE | 2 |
| 12 | 210_40_17 | GASKET FOR SHAFT HOUSING | 2 |
| 13 | 210_40_18 | DIAPHRAGM BUNA N | 2 |
| 14 | 210_40_19 | VALVE BALL BUNA N | 4 |
| 15 | 210_40_20 | VALVE SEAL BUNA N | 4 |
| 16 | 210_40_23 | SQUARE RING | 7 |
| 17 | 210_90_26 | SOCKET HEAD CAP SCREW(AIR DISC) | 2 |
| 18 | 210_90_27 | HEX. HEAD BOLT FOR O.C. SIDE (INLET /OUTLET) | 16 |
| 19 | 210_90_28 | HEX. HEAD BOLT (INNER/OUTER FLANGE) | 12 |
| 20 | 210_90_34 | C'SUNK SOCKET HEAD BOLT OR AIR DISC | 2 |
| 21 | 298_00_45 | NYLOC NUT FOR AIR DISC | 2 |
| 22 | 210_90_36 | WASHER | 78 |
| 23 | 210_97_01 | AIR VALVE REPLACEMENT KIT | 1 |
| 24 | 210_90_38 | HEX. HEAD BOLT FOR O.C. SIDE | 16 |
| 25 | 210_90_35 | SPRING WASHER | 32 |
| - | 210_97_39 | SILENCER (OPTIONAL) | 1 |

Note : Always use genuine TERYAIR spare parts for best performance.

# Air Valve Replacement Kit of DPB-75 ALB, 2109701

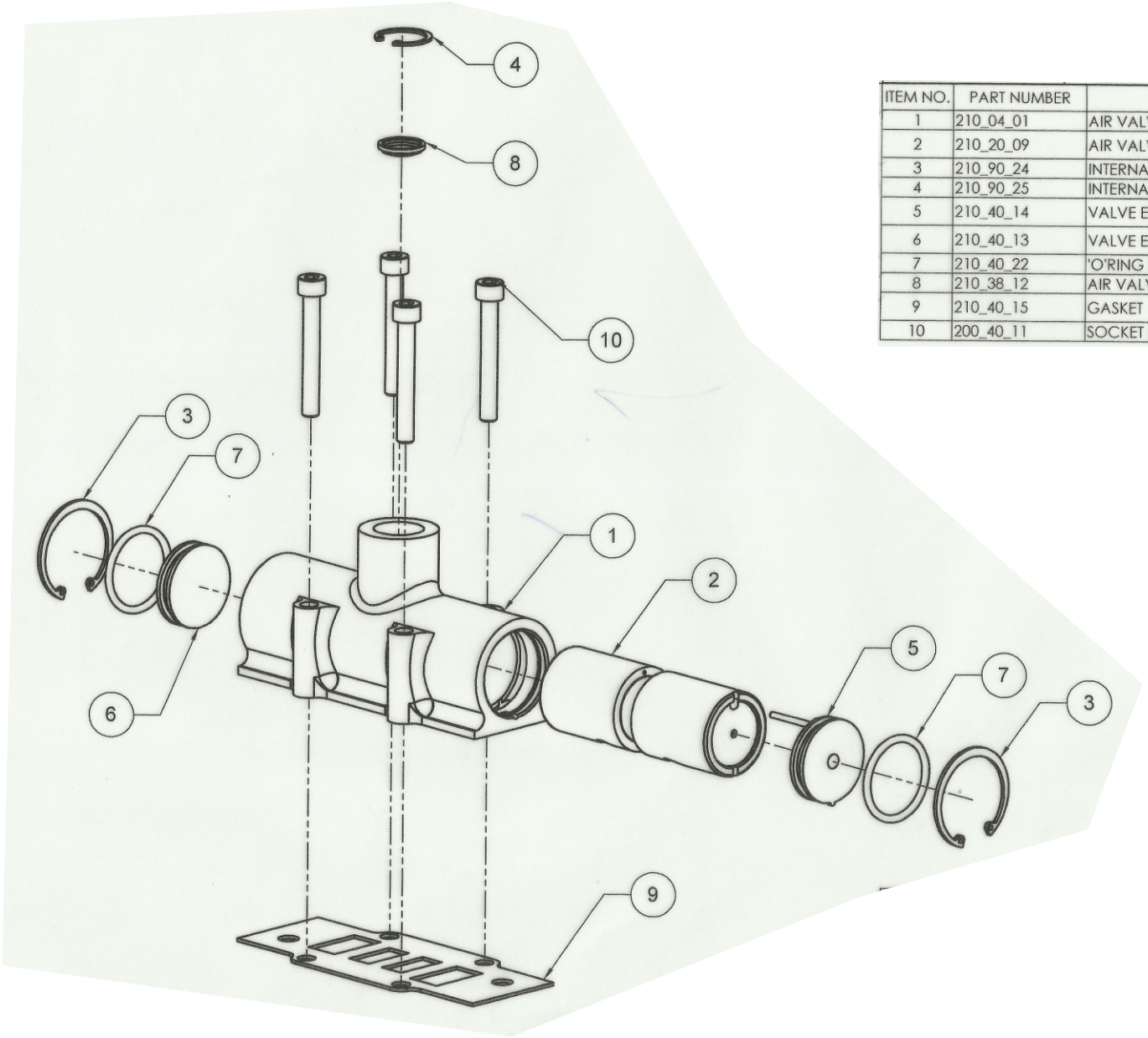


| ITEM NO. | PART NUMBER | DESCRIPTION | QTY. |
|---|---|---|---|
| 1 | 210_04_01 | AIR VALVE BODY | 1 |
| 2 | 210_20_09 | AIR VALVE (ECCENTRIC BORE) | 1 |
| 3 | 210_90_24 | INTERNAL CIRCLIP | 2 |
| 4 | 210_90_25 | INTERNAL CIRCLIP FOR SCREEN | 1 |
| 5 | 210_40_14 | VALVE END CAP (WITH PIN) | 1 |
| 6 | 210_40_13 | VALVE END CAP | 1 |
| 7 | 210_40_22 | 'O'RING FOR VALVE END CAP | 2 |
| 8 | 210_38_12 | AIR VALVE SCREEN | 1 |
| 9 | 210_40_15 | GASKET | 1 |
| 10 | 200_40_11 | SOCKET HEAD CAP SCREW | 4 |

## Technical Specifications for DPB75 Pumps

| Model No | DPB75ALN | DPB75ALB | DPB75ALT |
|---|---|---|---|
| Wetted Material | Aluminium | Aluminium | Aluminium |
| Non wetted part | Aluminium | Aluminium | Aluminium |
| Elastomer | Neoprene | Buna | PTFE |
| Ball material | Neoprene | Buna | PTFE |
| Seat material | Neoprene | Buna | Aluminium |
| O-ring | N. A. | N. A. | PTFE |
| Air_inlet_detail | ¾" inch BSPT | ¾" inch BSPT | ¾" inch BSPT |
| Fluid Inlet | 3" inch BSPT | 3" inch BSPT | 3" inch BSPT |
| Fluid Outlet | 3" inch BSPT | 3 " inch BSPT | 3 " inch BSPT |
| Suction lift | 5.8mtrs | 5.8mtrs | 3.5mtrs |
| Max_particle_size | 9.5mm | 9.5mm | 9.5mm |
| Construction | Bolted | Bolted | Bolted |
| Max_delivery | 840 liters/min | 840 liters/min | 680 liters/min |

## TEMPERATURE LIMITS OF STROKE DIAPHRAGM PUMPS

**Temperature Limitations**

Temperature limitations are based on mechanical stress only. Certain chemicals will significantly reduce the maximum safe operating temperatures.

Consult Chemical Resistance Guide for chemical compatibility and temperature limits for specific fluids.

Process fluid and environmental temperatures must be considered. Temperature limits for materials of construction and elastomers are listed below.

**Temperature Limits:**

Neoprene -17.8°C to 93.3°C 0°F to 200°F
Buna-N -12.2°C to 82.2°C 10°F to 180°F
EPDM -51°C to 137.8°C -60°F to 280°F
Viton® -40°C to 176.7°C -40°F to 350°F
PTFE -4.4°C to 104.4°C 24°F to 220°F

# INTENDED USE

The Diaphragm Pumps are intended for pumping water , viscous fluids up to 10000 cps, acidic, alkaline and abrasives slurries.

| S.No | Description | INTENDED USE OF ALN PUMP | INTENDED USE OF ALB PUMP | INTENDED USE OF ALT PUMP | INTENDED USE OF PPT PUMP | INTENDED USE OF SST PUMP |
|---|---|---|---|---|---|---|
| 1) | Fluid | 1) Slurries | 1) Gasolene | 1) Aromatic Or Chlorinated hydcrocarbon | 1) Acetate | 1) Aromatic Or Chlorinated hydcrocarbon |
| | | 2) Well water | 2) Fuel oil | 2) Acid | 2) Hydrogen sulfide | 2) Acid |
| | | 3) Sea water | 3) Non synthetic hydraulic oil | 3) Caustics | 3) Sulfuric Acid (Dilute) | 3) Caustics |
| | | | 4) Kerosene | 4) Ketone | 4) Sodium Hydroxide | 4) Ketone |
| | | | 5) Turpentine | 5) Acetone | 5) Formic Acid | 5) Acetone |
| | | | 6) Motor oil | 6) Paints | | 6) Naptha |
| | | | | 7) Detergents | | |
| | | | | | | |
| 2) | Suction Head | | | | | |
| 1) | DPB-12 | Head- 9 feet | Head- 9 feet | Head- 5 feet | Head -5 feet | Head -5 feet |
| | | | | | | |
| 2) | DP-25 | Head- 16 feet | Head-16 feet | Head-10 feet | Head-10 feet | Head-10 feet |
| | | | | | | |
| 3) | DP-40 | Head-16 feet | Head-16 feet | Head-10 feet | Head-12 feet | Head-12 feet |
| | | | | | | |
| 4) | DP-50 | Head-16 feet | Head-16 feet | Head-12 feet | Head-12 feet | Head-12 feet |
| | | | | | | |
| 5) | DPB-75 | Head-16 feet | Head-16 feet | Head-12 feet | Head-12 feet | Head-12 feet |

## PROHIBITIVE USE

Air operated double diaphragm pumps should not be used for purposes other than specified in intended use and following conditions must always be complied with.

1. Maximum slurry particle size must not be greater than the pump's solid passage capability. A strainer may be placed on the inlet line to eliminate particle larger than the pump's capability. Please refer operation and maintenance guide for pump's specific soilds passage capabilities.
2. Suction and discharge head lift requirement must not be greater than the pump's suction and discharge head lift capabilities as mentioned in operation and maintenance guide. Suction and discharge head lift will vary depending on number of inlet and discharge elbows, the viscosity of process fluid, elevation (atmospheric pressure) and pipe friction loss.
3. Air line should be blown out for 10 to 20 second before attaching to pump to make sure al pipe line debris is clear.
4. Pump should not be used for temperature beyond specified limit as mentioned in operation and maintenance guide.
5. Diaphragm life not only depends on diaphragm's chemical compatibility with the process fluids but also on the process conditions. These conditions will vary depending on the abrasiveness of your process fluid temperature, size of diaphragm, pumping media and liftconditions. Pump should not be used for highly abrasive fluids.
6. Safety glasses and suitable protective outerwear must be worn in vicinity of an operating pump fluid being pumped may spray in case of diaphragm rupture. Necessary care should be taken if the fluid being pump is hazardous.
7. Before opening supply hose connections ensure that supply has been shut off.
8. Operation and maintenance guide instruction should be followed before start operation and during maintenance & cleaning.
9. Personal safety equipments like Hand gloves, safety shoes, eye protection etc should be used.
10. Any internal part of pump assembly shall not be removed for independent operation or other use.
11. Do not exceed 125psi air supply pressure unless it has been specifically allowed in the operation and Maintenance Guide.
12. Instructions given in operation and maintenance guide regarding maintenance, Cleaning, Safety & Operation should be strictly followed.